[Hublot]

design Bordignon & Lanaro

[Fire]
Hublot
design Bordignon
& Lanaro

50 x 68 x h.91 cm
102 kg
5 kW

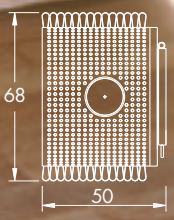

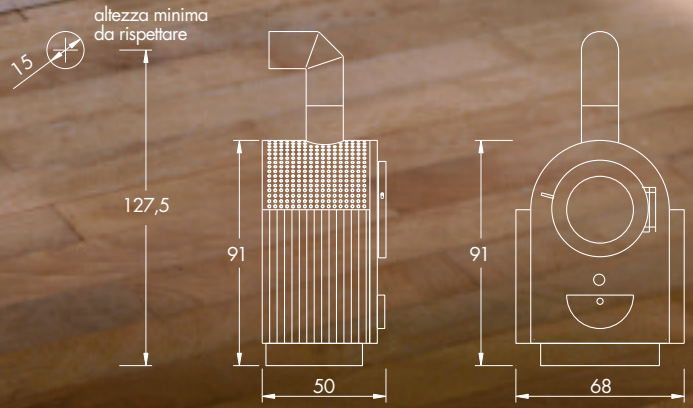

FI

AN·TRAX IT

[Fire]
Wood-U
design Andrea Crosetta

142 x 62 x h.99 cm

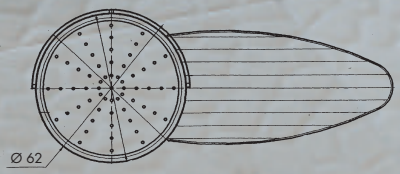

[Wood-U]

design Andrea Crosetta

FI

AN·TRAX IT